HELI

ANHUI HELI CO., LTD.

Add / No.668, FangXing Road, Hefei, China
Fax / +86-551-63639966
Tel / +86-551-63639068(America); 63639258(Europe);
63639358(Asia); 63662105(Africa & Middle East)

* Our products are subject to improvements and changes without notice.

Linked in YouTube Facebook

FLIH4Q004EN
Design&Print:Fokeli Printing 20231121

www.helichina.com

HELI

CPD15/18/20/25 /30/35

A3LH4-M A5LH4-S/M
A3LiLH4-M A7LiLH4-S

1.5-3.5 t

H4 Series Electric Counterbalance Forklift Truck For Cold Store

Fearless of Low Temperatures
Fearless Erosion

High Corrosion Resistance / Low Temperature Resistance / Better Performance

LI-ION

H4 SERIES

1.5-3.5 t

H4 Series Electric Counterbalance
Forklift Truck For Cold Store

Comfort and energy saving

The user experience is fully considered, and the superior operating space design provides high driving comfort.

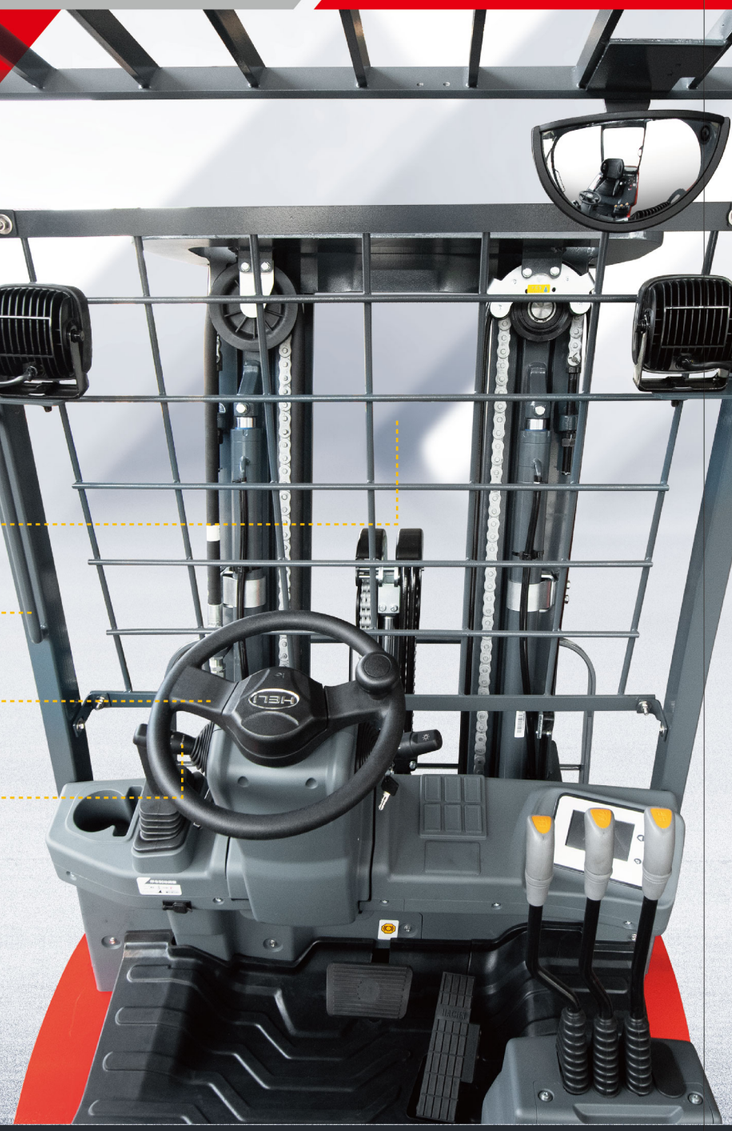

Wide view mast design, wide front view

The big handle and the super spacious cab design are suitable for people of different heights.

Steering wheel start steering (optional)

P. E, S three speed regulation

P	Powerful	Multi gear performance mode can be freely selected according to actual working conditions.
E	Economics	
S	Energy saving	

The whole truck is equipped with LED lighting system as standard, with high brightness, long service life and more energy saving

Reversing horn handle (s optional, M standard)

Semi enclosed shock-absorbing seat offers high comfort.

Electric special pattern tyre has low driving resistance.

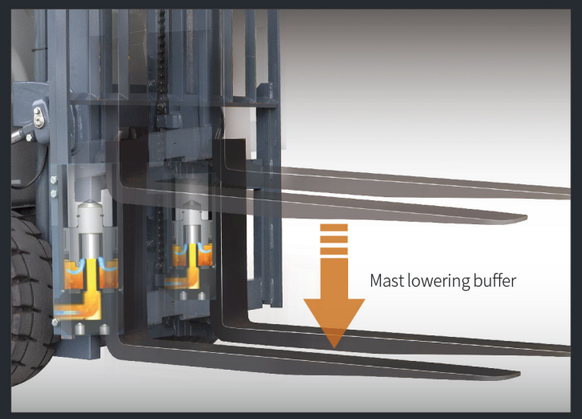

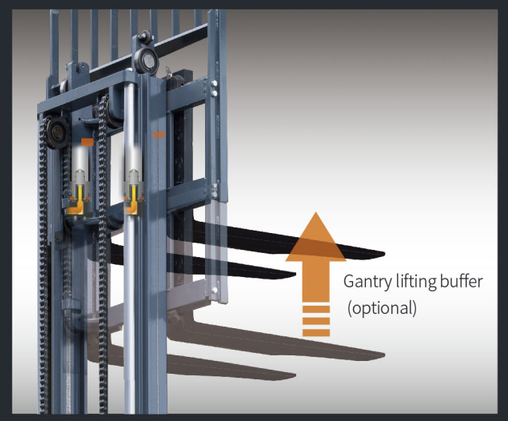

Right set operating valve stem offers good operation comfort.

Intelligent color screen instrument offers more friendly human-computer interaction.

Graphical interface design /
integrated handheld unit function /
optional integrated vehicle networking function

Full package design of instrument panel;
Water cup holder, mobile phone storage space,
USB interface (optional for S, standard for M)

Cold storage dedicated

Professional design for special working conditions of cold store, improving product service life

Upgrade the anti-corrosion and rust prevention of the whole truck body

The oil cylinder is double-layer chrome plated, and the fasteners are made of stainless steel or Dacromet treated; the chain is Dacromet treated.

Anti dripping design of the overhead guard

Built-in anti-collision light bracket

Overhead guard with protective net

Stainless steel bolts are used; wheel hub bolts are treated with Dacromet.

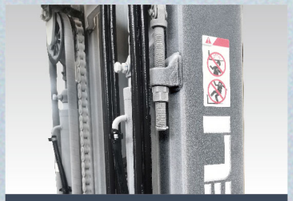

Special resin hose: It has better wear and corrosion resistance properties than ordinary rubber materials in low temperature environments.

Electrical components: Improve the waterproof level of the original components, specialized protection for the plug-in,waterproof measures for electronic control.

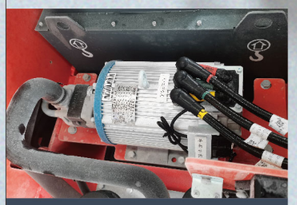

Special motor for cold store: Use special lubricating grease to ensure smooth rotation.

Low temperature specialized oil and lubricating grease: It can maintain a constant viscosity even at low temperatures which extends the service life of the equipment, and reduces the failure rate caused by wear.

Trilogy protection from corrosion

Surface coating
Ultra weather resistant powder coating.

Anti-corrosion coating
High performance electrophoretic primer.

Surface treatment
Oil removal and film conversion.

Intelligent Safety

Intelligent control and protection improve driver safety.

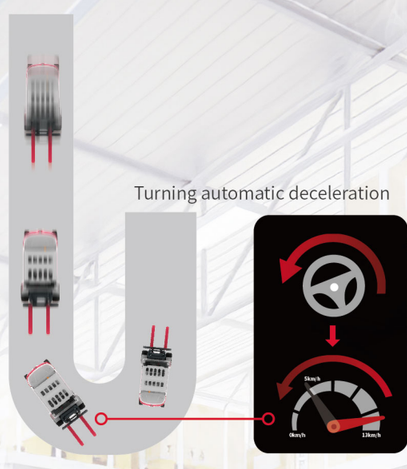

Manufacturer and Technical Data(1.5-1.8t Lead acid type)

	Characteristics						
1.01	Manufacturer			HELI			
1.02	Model			CPD15	CPD18	CPD15	CPD18
1.03	Configuration number			A3LH4-M/A5LH4-M		A5LH4-S	
1.04	Rated capacity	Q	kg	1500	1800	1500	1800
1.05	Load center distance	c	mm	500			
1.06	Power mode			Lead acid Battery			
1.07	Driving mode			Seated			
1.08	Front overhang	x	mm	409			
1.09	Wheelbase	y	mm	1475			
	Weight						
2.01	Total weight (with/without battery)		kg	3125/2365	3175/2415	3050/2350	3100/2400
2.02	Axle load (laden,front/rear)		kg	3965/660	4430/545	3935/615	4400/500
2.03	Axle load (unladen, front/rear)		kg	1545/1580	1540/1635	1520/1530	1510/1590
	Tyres						
3.01	Tyre type			Pneumatic tyre			
3.02	Tyre size,front			6.50-10-10PR			
3.03	Tyre size,rear			16×6-8-10PR			
3.04	Wheels, number front/rear (x=driven wheels)			2/2			
3.05	Tread, front	b10	mm	934			
3.06	Tread, rear	b11	mm	920			
	Dimensions						
4.01	Mast tilt angle (forward/backward)	α/β	°	6/8			
4.02	Height (mast lowered)	h1	mm	1995			
4.03	Free lifting height	h2	mm	155			
4.04	Lifting height (standard)	h3	mm	3000			
4.05	Max. height, extended (with backrest)	h4	mm	4014			
4.06	Height of overhead guard	h6	mm	2130			
4.07	Seat height relating to SIP (to ground)	h7	mm	1125			
4.08	Towing coupling height	h10	mm	250			
4.09	Overall length (with fork)	l1	mm	3120			
4.10	Overall length (without fork)	l2	mm	2200			
4.11	Overall width	b1	mm	1120			
4.12	Fork carriage, according to ISO2328			2A			
4.13	Fork size:thickness x width x length	s/e/l	mm	35×100×920			
4.14	Fork ajustable range(external at the fork),Max./Min.	b5	mm	960/200			
4.15	Ground clearance (at mast)	m1	mm	100			
4.16	Ground clearance (center of wheelbase)	m2	mm	95			
4.17	Right angle stacking aisle width for pallet 1000 x1200mm crossways	Ast	mm	3575			
4.18	Right angle stacking aisle width for pallet 800 x1200mm lengthways	Ast	mm	3770			
4.19	Min. outside turning radius	Wa	mm	1920			
	Performance data						
5.01	Travel speed (laden/unladen)		km/h	14.5/15		12/13	
5.02	Lift speed (laden/unladen)		m/s	0.320/0.440	0.290/0.400	0.290/0.400	0.270/0.400
5.03	Lowering speed (laden/unladen)		m/s	0.400/0.400			
5.04	Max.drawbar pull (laden)		N	10200/9700	10200/9800	10200/9700	10200/9800
5.05	Max.gradeability (laden/unladen)		%	17/27	15/26	15/23	15/22
5.06	Acceleration time(10 m)(laden/unladen)		s	5.5/5.2	5.6/5.3	6.0/5.7	6.1/5.8
	Battery						
6.01	Battery voltage/Capacity (K5)		V/Ah	48/480		48/400	
6.02	Battery weight		kg	760		700	
	Motor and controller						
7.01	Driving motor powering (S2-60min)		kW	8			
7.02	Lifting motor powering (S3-15%)		kW	10.6			
7.03	Driving motor controlling mode			MOSFET/AC			
7.04	Lifting motor controlling mode			MOSFET/AC			
	Addition data						
8.01	Service brake/Parking brake			Hydraulic/Mechanical			
8.02	Operating pressure for attachments		Mpa	16			

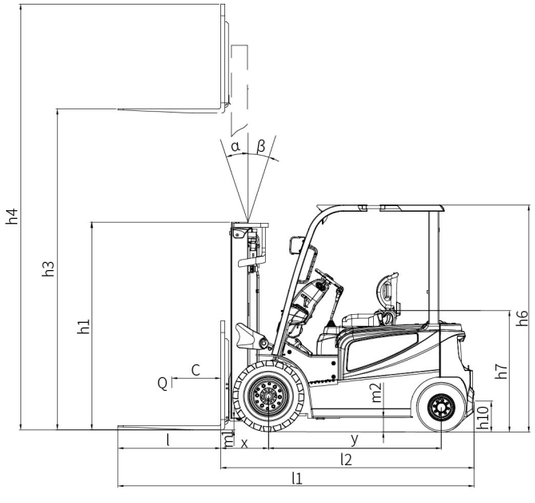

Ast: right angle stacking aisle width
a: clearance 200mm

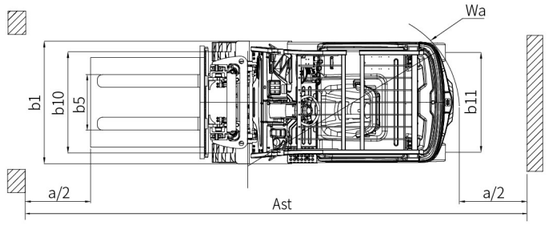

Manufacturer and Technical Data (2-3.5t Lead acid type)

	Characteristics										
1.01	Manufacturer			HELI							
1.02	Model			CPD20	CPD25	CPD20	CPD25	CPD30	CPD35	CPD30	CPD35
1.03	Configuration number			A3LH4-M/A5LH4-M		A5LH4-S		A3LH4-M/A5LH4-M		A5LH4-S	
1.04	Rated capacity	Q	kg	2000	2500	2000	2500	3000	3500	3000	3500
1.05	Load center distance	c	mm	500				500			
1.06	Power mode			Lead acid Battery				Lead acid Battery			
1.07	Driving mode			Seated				Seated			
1.08	Front overhang	x	mm	460				477	482	477	482
1.09	Wheelbase	y	mm	1660				1750			
	Weight										
2.01	Total weight (with/without battery)		kg	4000/3070	4160/3230	3910/3070	4070/3230	5090/3720	5300/3930	4900/3700	5110/3910
2.02	Axle load (laden,front/rear)		kg	5270/730	5980/680	5190/720	5900/670	7160/930	7905/895	7075/825	7860/750
2.03	Axle load (unladen, front/rear)		kg	2035/1965	2025/2135	2005/1905	1985/2085	2530/2560	2455/2845	2390/2510	2385/2725
	Tyres										
3.01	Tyre type			Pneumatic tyre				Front Pneumatic tyre/Rear Solid tyre			
3.02	Tyre size,front			7.00-12-14PR				28×9-15-14PR			
3.03	Tyre size,rear			18×7-8-14PR				18×7-8			
3.04	Wheels, number front/rear (x=driven wheels)			2/2				2/2			
3.05	Tread, front	b10	mm	970				1000			
3.06	Tread, rear	b11	mm	960				970			
	Dimensions										
4.01	Mast tilt angle (forward/backward)	α/β	°	6/8				6/10			
4.02	Height (mast lowered)	h1	mm	2000				2070	2120	2070	2120
4.03	Free lifting height	h2	mm	165				155			
4.04	Lifting height (standard)	h3	mm	3000				3000			
4.05	Max. height, extended (with backrest)	h4	mm	4020				4217			
4.06	Height of overhead guard	h6	mm	2170				2180			
4.07	Seat height relating to SIP (to ground)	h7	mm	1154				1164			
4.08	Towing coupling height	h10	mm	300				310			
4.09	Overall length (with fork)	l1	mm	3354	3504	3354	3504	3637	3642	3637	3642
4.10	Overall length (without fork)	l2	mm	2434				2567	2572	2567	2572
4.11	Overall width	b1	mm	1180				1260			
4.12	Fork carriage, according to ISO2328			2A				3A			
4.13	Fork size:thickness x width x length	s/e/l	mm	40×122×920	40×122×1070	40×122×920	40×122×1070	45×125×1070	50×125×1070	45×125×1070	50×125×1070
4.14	Fork ajustable range(external at the fork),Max./Min.	b5	mm	1030/250				1060/250			
4.15	Ground clearance (at mast)	m1	mm	100				110			
4.16	Ground clearance (center of wheelbase)	m2	mm	125				135			
4.17	Right angle stacking aisle width for pallet 1000 x1200mm crossways	Ast	mm	3753				3912	3917	3912	3917
4.18	Right angle stacking aisle width for pallet 800 x1200mm lengthways	Ast	mm	3953				4115	4117	4115	4117
4.19	Min. outside turning radius	Wa	mm	2140				2235			
	Performance data										
5.01	Travel speed (laden/unladen)		km/h	14.5/15		12/13		14.5/15		12/13	
5.02	Lift speed (laden/unladen)		m/s	0.320/0.440	0.290/0.440	0.290/0.400	0.270/0.400	0.320/0.440	0.290/0.440	0.290/0.400	0.270/0.400
5.03	Lowering speed (laden/unladen)		m/s	0.360/0.460				0.400/0.400			
5.04	Max.drawbar pull (laden)		N	13600/13000	14000/13300	13600/13000	14000/13300	16300/15800	17000/16600	16300/16000	16900/15900
5.05	Max.gradeability (laden/unladen)		%	17/26	15/25	15/25	15/25	17/26	15/23	15/25	15/22
5.06	Acceleration time(10 m)(laden/unladen)		s	5.9/5.0	6.1/5.0	6.0/5.3	6.2/5.3	5.7/5.1	6.1/5.2	5.8/5.3	6.3/5.4
	Battery										
6.01	Battery voltage/Capacity (K5)		V/Ah	48/600		48/500		80/480		80/400	
6.02	Battery weight		kg	930		840		1370		1200	
	Motor and controller										
7.01	Driving motor powering (S2-60min)		kW	11				15			
7.02	Lifting motor powering (S3-15%)		kW	12				16			
7.03	Driving motor controlling mode			MOSFET/AC				MOSFET/AC			
7.04	Lifting motor controlling mode			MOSFET/AC				MOSFET/AC			
	Addition data										
8.01	Service brake/Parking brake			Hydraulic/Mechanical				Hydraulic/Mechanical			
8.02	Operating pressure for attachments		Mpa	16				16			

Load curve

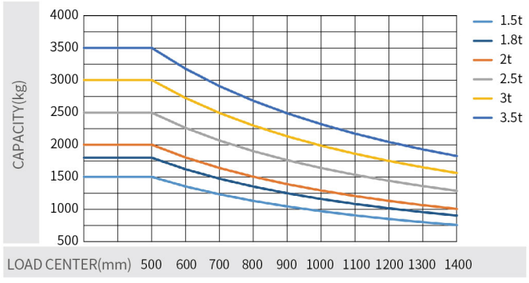

Note:
The vertical axis stands for load capacity and the horizontal axis stands for load center which is calculated from the front surface of the forks to the gravity of the standard load. the standard load means a cubic with 1000mm edge length. When mast is tilted forward, using non-standard forks or loading large goods, the load capacity will be reduced. The load capacity of standard mast at different load center can be known from this load chart.

Manufacturer and Technical Data(1.5-1.8t Lithium type)

	Characteristics						
1.01	Manufacturer			HELI			
1.02	Model			CPD15	CPD18	CPD15	CPD18
1.03	Configuration number			A3LILH4-M		A7LILH4-S	
1.04	Rated capacity	Q	kg	1500	1800	1500	1800
1.05	Load center distance	c	mm	500			
1.06	Power mode			Lithium battery			
1.07	Driving mode			Seated			
1.08	Front overhang	x	mm	409		409	
1.09	Wheelbase	y	mm	1475		1475	
	Weight						
2.01	Total weight (with/without battery)		kg	2855/2675	2970/2790	2835/2670	2950/2785
2.02	Axle load (laden,front/rear)		kg	3720/635	4205/565	3710/625	4195/555
2.03	Axle load (unladen, front/rear)		kg	1295/1560	1295/1675	1285/1550	1285/1665
	Tyres						
3.01	Tyre type			Pneumatic tyre		Pneumatic tyre	
3.02	Tyre size,front			6.50-10-10PR		6.50-10-10PR	
3.03	Tyre size,rear			16×6-8-10PR		16×6-8-10PR	
3.04	Wheels, number front/rear (x=driven wheels)			2/2		2/2	
3.05	Tread, front	b10	mm	934		934	
3.06	Tread, rear	b11	mm	920		920	
	Dimensions						
4.01	Mast tilt angle (forward/backward)	α/β	°	6/8		6/8	
4.02	Height (mast lowered)	h1	mm	1995		1995	
4.03	Free lifting height	h2	mm	155		155	
4.04	Lifting height (standard)	h3	mm	3000		3000	
4.05	Max. height, extended (with backrest)	h4	mm	4014		4014	
4.06	Height of overhead guard	h6	mm	2130		2130	
4.07	Seat height relating to SIP (to ground)	h7	mm	1125		1125	
4.08	Towing coupling height	h10	mm	250		250	
4.09	Overall length (with fork)	l1	mm	3120		3120	
4.10	Overall length (without fork)	l2	mm	2200		2200	
4.11	Overall width	b1	mm	1120		1120	
4.12	Fork carriage , according to ISO2328			2A		2A	
4.13	Fork size:thickness x width x length	s/e/l	mm	35×100×920		35×100×920	
4.14	Fork ajustable range(external at the fork),Max./Min.	b5	mm	960/200		960/200	
4.15	Ground clearance (at mast)	m1	mm	100		100	
4.16	Ground clearance (center of wheelbase)	m2	mm	95		95	
4.17	Right angle stacking aisle width for pallet 1000 x1200mm crossways	Ast	mm	3575		3575	
4.18	Right angle stacking aisle width for pallet 800 x1200mm lengthways	Ast	mm	3770		3770	
4.19	Min. outside turning radius	Wa	mm	1920		1920	
	Performance data						
5.01	Travel speed (laden/unladen)		km/h	14.5/15		12/13	
5.02	Lift speed (laden/unladen)		m/s	0.320/0.440	0.290/0.440	0.290/0.400	0.270/0.400
5.03	Lowering speed (laden/unladen)		m/s	0.400/0.400		0.400/0.400	
5.04	Max.drawbar pull (laden)		N	10200/9700	10200/9800	10200/9700	10200/9800
5.05	Max.gradeability (laden/unladen)		%	17/27	15/26	15/23	15/22
5.06	Acceleration time(10 m)(laden/unladen)		s	5.5/5.2	5.6/5.3	6.0/5.7	6.1/5.8
	Battery						
6.01	Battery voltage/Capacity (K5)		V/Ah	80/150		80/125	
6.02	Battery weight		kg	180		163	
	Motor and controller						
7.01	Driving motor powering (S2-60min)		kW	8		8	
7.02	Lifting motor powering (S3-15%)		kW	10.6		10.6	
7.03	Driving motor controlling mode			MOSFET/AC			
7.04	Lifting motor controlling mode			MOSFET/AC			
	Addition data						
8.01	Service brake/Parking brake			Hydraulic/Mechanical			
8.02	Operating pressure for attachments		Mpa	16			

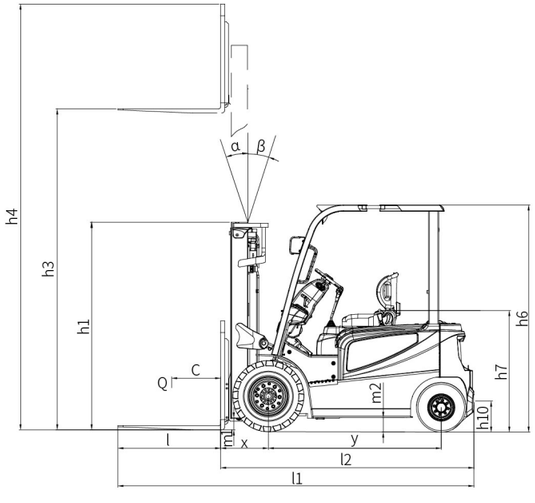

Ast: right angle stacking aisle width
a: clearance 200mm

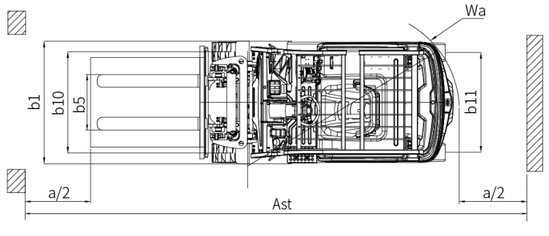

Manufacturer and Technical Data(2-3.5t Lithium type)

	Characteristics										
1.01	Manufacturer			HELI							
1.02	Model			CPD20	CPD25	CPD20	CPD25	CPD30	CPD35	CPD30	CPD35
1.03	Configuration number			A3LILH4-M		A7LILH4-S		A3LILH4-M		A7LILH4-S	
1.04	Rated capacity	Q	kg	2000	2500	2000	2500	3000	3500	3000	3500
1.05	Load center distance	c	mm	500							
1.06	Power mode			Lithium battery							
1.07	Driving mode			Seated							
1.08	Front overhang	x	mm	460				477	482	477	482
1.09	Wheelbase	y	mm	1660				1750			
	Weight										
2.01	Total weight (with/without battery)		kg	3585/3395	3925/3735	3540/3375	3880/3715	4550/4310	4860/4620	4500/4290	4810/4600
2.02	Axle load (laden,front/rear)		kg	4970/615	5790/635	4940/600	5760/620	6750/800	7630/730	6710/790	7590/720
2.03	Axle load (unladen, front/rear)		kg	1750/1835	1780/2145	1720/1820	1750/2130	2050/2500	2110/2750	2010/2490	2070/2740
	Tyres										
3.01	Tyre type			Pneumatic tyre				Front Pneumatic tyre/Rear Solid tyre			
3.02	Tyre size,front			7.00-12-14PR				28×9-15-14PR			
3.03	Tyre size,rear			18×7-8-14PR				18×7-8			
3.04	Wheels, number front/rear (x=driven wheels)			2/2				2/2			
3.05	Tread, front	b10	mm	970				1000			
3.06	Tread, rear	b11	mm	960				970			
	Dimensions										
4.01	Mast tilt angle (forward/backward)	α/β	°	6/8				6/10			
4.02	Height (mast lowered)	h1	mm	2000				2070	2120	2070	2120
4.03	Free lifting height	h2	mm	165				155			
4.04	Lifting height (standard)	h3	mm	3000				3000			
4.05	Max. height, extended (with backrest)	h4	mm	4020				4217			
4.06	Height of overhead guard	h6	mm	2170				2180			
4.07	Seat height relating to SIP (to ground)	h7	mm	1154				1164			
4.08	Towing coupling height	h10	mm	300				310			
4.09	Overall length (with fork)	l1	mm	3354	3504	3354	3504	3637	3642	3637	3642
4.10	Overall length (without fork)	l2	mm	2434				2567	2572	2567	2572
4.11	Overall width	b1	mm	1180				1260			
4.12	Fork carriage , according to ISO2328			2A				3A			
4.13	Fork size:thickness x width x length	s/e/l	mm	40×122×920	40×122×1070	40×122×920	40×122×1070	45×125×1070	50×125×1070	45×125×1070	50×125×1070
4.14	Fork ajustable range(external at the fork),Max./Min.	b5	mm	1030/250				1060/250			
4.15	Ground clearance (at mast)	m1	mm	100				110			
4.16	Ground clearance (center of wheelbase)	m2	mm	125				135			
4.17	Right angle stacking aisle width for pallet 1000 x1200mm crossways	Ast	mm	3753				3912	3917	3912	3917
4.18	Right angle stacking aisle width for pallet 800 x1200mm lengthways	Ast	mm	3953				4115	4117	4115	4117
4.19	Min. outside turning radius	Wa	mm	2140				2235			
	Performance data										
5.01	Travel speed (laden/unladen)		km/h	14.5/15		12/13		14.5/15		12/13	
5.02	Lift speed (laden/unladen)		m/s	0.320/0.440	0.290/0.440	0.290/0.400	0.270/0.400	0.320/0.440	0.290/0.440	0.290/0.400	0.270/0.400
5.03	Lowering speed (laden/unladen)		m/s	0.360/0.460				0.400/0.400			
5.04	Max.drawbar pull (laden)		N	13600/13000	14000/13300	13600/13000	14000/13300	16300/15800	17000/16600	16300/16000	16900/15900
5.05	Max.gradeability (laden/unladen)		%	17/26	15/25	15/25	15/25	17/26	15/23	15/25	15/22
5.06	Acceleration time(10 m)(laden/unladen)		s	5.9/5.0	6.1/5.0	6.0/5.3	6.2/5.3	5.7/5.1	6.1/5.2	5.8/5.3	6.3/5.4
	Battery										
6.01	Battery voltage/Capacity (K5)		V/Ah	80/202		80/150		80/250		80/202	
6.02	Battery weight		kg	190		165		240		210	
	Motor and controller										
7.01	Driving motor powering (S2-60min)		kW	11				15			
7.02	Lifting motor powering (S3-15%)		kW	12				16			
7.03	Driving motor controlling mode			MOSFET/AC							
7.04	Lifting motor controlling mode			MOSFET/AC							
	Addition data										
8.01	Service brake/Parking brake			Hydraulic/Mechanical							
8.02	Operating pressure for attachments		Mpa	16							

HELI smart fleet management system(optional)

Vehicle positioning	Statistical form
Remote diagnosis	Vehicle management
Remote monitoring	Identification recognition (optional)
Maintenance reminder	Weight management (optional)
Battery management	Collision management (optional)

Advantages of dedicated lithium batteries for cold store

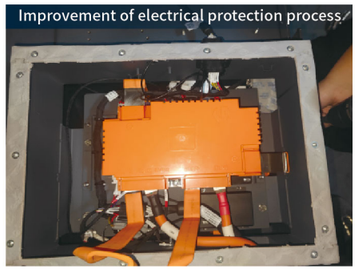
Improvement of electrical protection process

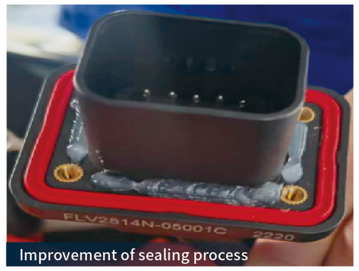
Improvement of sealing process


Improvement of insulation process

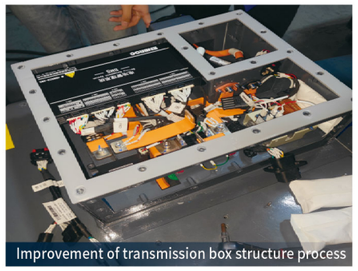
Improvement of transmission box structure process

- The dedicated lithium battery for Heli cold storage vehicles uses lithium iron phosphate cells, which are mature and reliable based on large-scale applications in the market.
- The internal electrical components, battery pack sealing, and insulation process of lithium batteries for the truck have been significantly improved, with a protection level of IP67 which meet the requirements for entering and exiting cold store environments.
- Standard configuration of low-temperature electric heating meets the performance requirements of batteries in cold store environments.
- The service life of the dedicated lithium battery for cold store truck is the same as that of the standard of normal trucks, and the warranty period is not reduced due to harsh environments.

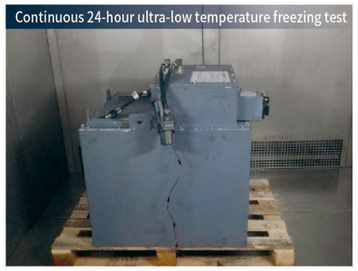
Continuous 24-hour ultra-low temperature freezing test

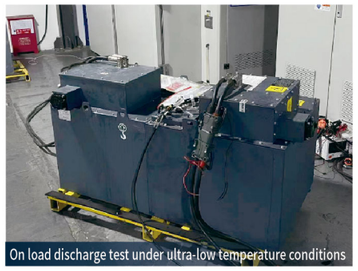
On load discharge test under ultra-low temperature conditions


整体IP67级防护试验

Lithium battery

Battery brand	HELI						
Voltage/Capacity	80V/125Ah	80V/150Ah	80V/202Ah	80V/250Ah	80V/280Ah	80V/404Ah	80V/560Ah
1.5-1.8t S	●	○	○	○	○	—	—
1.5-1.8t M	—	●	○	○	○	—	—
2-2.5t S	—	●	○	○	○	○	—
2-2.5t M	—	—	●	○	○	○	—
3-3.5t S	—	—	●	○	○	○	○
3-3.5t M	—	—	—	●	○	○	○
Heating at low Temperature	●						

Battery brand	ENEROC, CATL core											
Voltage/Capacity	80V/125Ah	80V/150Ah	80V/173Ah	80V/202Ah	80V/228Ah	80V/271Ah	80V/302Ah	80V/346Ah	80V/404Ah	80V/456Ah	80V/542Ah	80V/604Ah
1.5-1.8t S	○	○	○	○	○	○	○	—	—	—	—	—
1.5-1.8t M	—	○	○	○	○	○	○	—	—	—	—	—
2-2.5t S	—	○	○	○	○	○	○	○	○	○	—	—
2-2.5t M	—	—	—	○	○	○	○	○	○	○	—	—
3-3.5t S	—	—	—	○	○	○	○	○	○	○	○	○
3-3.5t M	—	—	—	—	—	○	○	○	○	○	○	○
Heating at low Temperature	●											

Note: "●"standard ; "○"optional ; "—" non-configurable.

Lithium battery charger

Charger model		D80V100ALI-438
Wiring method		Three phase four wire system
Input power	KVA	10
Superior power supply air switch model	A	32
Input voltage range	Vac	380±15%
Input current	A	< 20A
Output current	A	5~100
Protection level		Indoor use
Working environment temperature	℃	-20~+45
Power plug-in		REMA320 male
Charging time		Full charge time=required charging capacity of lithium battery/charging current+0.2 hours Example: The 3.8t lithium battery truck is equipped with a standard battery capacity of 80V/250AH. If the lithium battery capacity has been discharged to the instrument alarm, use a 100A charger to charge, The fully charged time is around 250 * 0.9/100+0.2=2.45 hours

Lead acid Battery

Battery brand	Made in CHINA				
Voltage/Capacity	48V/400Ah	48V/420Ah	48V/480Ah	48V/560Ah	48V/600Ah
1.5-1.8t S	●	○	○	○	○
1.5-1.8t M	—	—	●	○	○

Battery brand	GS		HOPPECKE			FAAM		
Voltage/Capacity	48V/480Ah	48V/560Ah	48V/420Ah	48V/480Ah	48V/560Ah	48V/420Ah	48V/500Ah	48V/560Ah
1.5-1.8t S	○	○	○	○	○	○	○	○
1.5-1.8t M	○	○	—	○	○	—	○	○

Battery brand	Made in CHINA			
Voltage/Capacity	48V/500Ah	48V/600Ah	48V/700Ah	48V/750Ah
2-2.5t S	●	○	○	○
2-2.5t M	—	●	○	○

Battery brand	GS	HOPPECKE		FAAM		
Voltage/Capacity	48V/700Ah	48V/525Ah	48V/700Ah	48V/525Ah	48V/625Ah	48V/700Ah
2-2.5t S	○	○	○	○	○	○
2-2.5t M	○	—	○	—	○	○

Battery brand	Made in CHINA			
Voltage/Capacity	80V/400Ah	80V/480Ah	80V/560Ah	80V/600Ah
3-3.5t S	●	○	○	○
3-3.5t M	—	●	○	○

Battery brand	GS		HOPPECKE			FAAM		
Voltage/Capacity	80V/480Ah	80V/560Ah	80V/420Ah	80V/480Ah	80V/560Ah	80V/420Ah	80V/500Ah	80V/560Ah
3-3.5t S	○	○	○	○	○	○	○	○
3-3.5t M	○	○	—	○	○	—	○	○

Note: "●"standard ; "○"optional ; "—" non-configurable.

1.5t/1.8t Mast parameters

Mast type	Mast model	Max.lifting height (mm)	Load capacity (lode center 500mm)(kg)		Height (mast lowered) (mm)	Free lift (with backrest) (mm)	Service weight (kg)				Mast tilt angle α/β (°)
			1.5t	1.8t	1.5-1.8t	1.5-1.8t	1.5t-S	1.5t-M	1.8t-S	1.8t-M	1.5-1.8t
2-stage standard Mast	M200	2000	1500	1800	1495	155	2986	3061	3036	3111	3/3
	M250	2500	1500	1800	1745	155	3018	3093	3068	3143	6/6
	M300	3000	1500	1800	1995	155	3050	3125	3100	3175	6/8
	M330	3300	1500	1800	2145	155	3069	3144	3119	3194	6/8
	M350	3500	1500	1800	2245	155	3082	3157	3132	3207	6/8
	M370	3700	1500	1800	2345	155	3095	3170	3145	3220	6/6
	M400	4000	1500	1800	2545	155	3143	3218	3193	3268	6/6
	M425	4250	1500	1800	2670	155	3160	3235	3210	3285	6/6
	M450	4500	1450	1650 *1750	2795	155	3176	3251	3226	3301	6/6 *6/8
	M500	5000	1200 *1300	1400 *1600	3045	155	3208	3283	3258	3333	6/6 *6/6
	M550	5500	1000 *1250	1100 *1550	3345	155	3270	3345	3320	3395	3/6 *3/6
	M600	6000	800 *1200	900 *1450	3595	155	3302	3377	3352	3427	3/6 *3/6
2-stage full free mast	ZM200	2000	1500	1800	1495	485	3035	3110	3085	3160	3/3
	ZM250	2500	1500	1800	1745	735	3067	3142	3117	3192	6/6
	ZM300	3000	1500	1800	1995	985	3101	3176	3151	3226	6/8
	ZM330	3300	1500	1800	2145	1135	3123	3198	3173	3248	6/8
	ZM350	3500	1500	1800	2245	1235	3138	3213	3188	3263	6/8
	ZM370	3700	1500	1800	2345	1335	3150	3225	3200	3275	6/6
	ZM400	4000	1500	1800	2545	1535	3198	3273	3248	3323	6/6
	ZM425	4250	1500	1800	2670	1660	3217	3292	3267	3342	6/6
	ZM450	4500	1450	1650 *1750	2795	1785	3236	3311	3286	3361	6/6 *6/8
	ZM500	5000	1200 *1300	1400 *1600	3045	2035	3270	3345	3320	3395	6/6 *6/6
	ZM550	5500	1000 *1250	1100 *1550	3345	2335	3331	3406	3381	3456	3/6 *3/6
	ZM600	6000	800 *1200	900 *1450	3595	2585	3365	3440	3415	3490	3/6 *3/6
3 stage full free mast	ZSM360	3600	1500	1800	1790	785	3149	3224	3199	3274	6/6
	ZSM400	4000	1500	1800	1925	920	3173	3248	3223	3298	6/6
	ZSM435	4350	1450 *1500	1700 *1800	2040	1035	3198	3273	3248	3323	6/6 *6/6
	ZSM450	4500	1450 *1500	1650 *1750	2090	1085	3209	3284	3259	3334	6/6 *6/6
	ZSM470	4700	1400 *1450	1600 *1650	2160	1155	3225	3300	3275	3350	6/6 *6/6
	ZSM480	4800	1350 *1400	1550 *1650	2190	1185	3232	3307	3282	3357	6/6 *6/6
	ZSM500	5000	1200 *1300	1400 *1600	2290	1285	3253	3328	3303	3378	6/6 *6/6
	ZSM540	5400	1000 *1250	1100 *1550	2415	1410	3279	3354	3329	3404	3/6 *3/6
	ZSM600	6000	800 *1200	900 *1450	2640	1635	3351	3125	3401	3476	3/6 *3/6
	ZSM650	6500	*1100	*1250	2840	1835	3389	3464	3439	3514	3/3 *3/3
	ZSM700	7000	*900	*950	3025	2025	3427	3502	3477	3552	3/3 *3/3

Note: *Indicates the rated load capacity of the front wheel with twin tyres; When the front wheels of 1.5-1.8t are twin tyres (pneumatic tyres) and twin tyres (solid tyres), the service weight is increased by 58kg and 104kg respectively according to the table data.
2-stage full free mast: 1.5-1.8t: When there is no backrest, the free lifting height increases by 379mm.
3-stage full free mast: 1.5-1.8t: When there is no backrest, the free lifting height increases by 484mm.

2t/2.5t Mast parameters

Mast type	Mast model	Max.lifting height (mm)	Load capacity (lode center 500mm)(kg)		Height (mast lowered) (mm)	Free lift (with backrest) (mm)	Service weight (kg)				Mast tilt angle α/β (°)
			2t	2.5t	2-2.5t	2-2.5t	2.0t-S	2.0t-M	2.5t-S	2.5t-M	2-2.5t
2-stage standard Mast	M200	2000	2000	2500	1500	150	3820	3910	3980	4070	6/6
	M250	2500	2000	2500	1750	150	3865	3955	4025	4115	6/8
	M300	3000	2000	2500	2000	150	3910	4000	4070	4160	6/8
	M330	3300	2000	2500	2150	150	3937	4027	4097	4187	6/10
	M350	3500	2000	2500	2250	150	3955	4045	4115	4205	6/10
	M370	3700	2000	2500	2350	150	3973	4063	4133	4223	6/6
	M400	4000	2000	2500	2550	150	4050	4140	4210	4300	6/6
	M425	4250	1950 *2000	2450 *2500	2675	150	4073	4163	4233	4323	6/6 *6/10
	M450	4500	1900 *1950	2300 *2400	2800	150	4095	4185	4255	4345	6/6 *6/10
	M500	5000	1800 *1850	2100 *2200	3050	150	4140	4230	4300	4390	6/6 *6/6
	M550	5500	1450 *1700	1500 *2150	3350	150	4235	4325	4395	4485	3/6 *3/6
	M600	6000	1050 *1600	1150 *1800	3600	150	4280	4370	4440	4530	3/6 *3/6
2-stage full free mast	ZM200	2000	2000	2500	1500	496	3848	3938	4008	4098	6/6
	ZM250	2500	2000	2500	1750	746	3896	3986	4056	4146	6/8
	ZM300	3000	2000	2500	2000	996	3951	4041	4111	4201	6/8
	ZM330	3300	2000	2500	2150	1146	3981	4071	4141	4231	6/10
	ZM350	3500	2000	2500	2250	1246	3999	4089	4159	4249	6/10
	ZM370	3700	2000	2500	2350	1346	4019	4109	4179	4269	6/6
	ZM400	4000	2000	2500	2550	1546	4095	4185	4255	4345	6/6
	ZM425	4250	1950 *2000	2450 *2500	2675	1671	4119	4209	4279	4369	6/6 *6/10
	ZM450	4500	1900 *1950	2300 *2400	2800	1796	4145	4235	4305	4395	6/6 *6/10
	ZM500	5000	1800 *1850	2100 *2200	3050	2046	4196	4286	4356	4446	6/6 *6/6
	ZM550	5500	1450 *1700	1500 *2150	3350	2346	4293	4383	4453	4543	3/6 *3/6
	ZM600	6000	1050 *1600	1150 *1800	3600	2596	4343	4433	4503	4593	3/6 *3/6
3 stage full free mast	ZSM360	3600	2000	2500	1800	796	4075	4165	4235	4325	6/6
	ZSM400	4000	2000	2500	1950	946	4116	4206	4276	4366	6/6
	ZSM435	4350	1900 *2000	2400 *2500	2050	1046	4142	4232	4302	4392	6/6 *6/6
	ZSM450	4500	1850 *1900	2300 *2350	2100	1096	4155	4245	4315	4405	6/6 *6/6
	ZSM470	4700	1800 *1850	2200 *2250	2165	1161	4174	4264	4334	4424	6/6 *6/6
	ZSM480	4800	1800 *1850	2200 *2250	2210	1206	4187	4277	4347	4437	6/6 *6/6
	ZSM500	5000	1700 *1800	2100 *2200	2300	1296	4210	4300	4370	4460	6/6 *6/6
	ZSM540	5400	1450 *1700	1500 *2150	2400	1396	4242	4332	4402	4492	3/6 *3/6
	ZSM600	6000	1000 *1600	1100 *1800	2600	1596	4345	4435	4505	4595	3/6 *3/6
	ZSM650	6500	*1450	*1650	2800	1796	4401	4491	4561	4651	3/6 *3/6
	ZSM700	7000	*1150	*1300	2975	1971	4451	4541	4611	4701	3/6 *3/6

Note: *Indicates the rated load capacity of the front wheel with twin tyres; When the front wheels of 2-2.5t are twin tyres (pneumatic tyres) and twin tyres (solid tyres), the service weight is increased by 95kg and 155kg respectively according to the table data.
2-stage full free mast: 2-2.5t: When there is no backrest, the free lifting height increases by 376mm.
3-stage full free mast: 2-2.5t: When there is no backrest, the free lifting height increases by 356mm.

3t/3.5t Mast parameters

Mast type	Mast model	Max.lifting height (mm)	Load capacity (lode center 500mm)(kg)				Height (mast lowered) (mm)		Free lift (with backrest) (mm)		Service weight (kg)				Mast tilt angle α/β(°)
			3t-M	3t-S	3.5t-M	3.5t-S	3t	3.5t	3t	3.5t	3.0t-S	3.0t-M	3.5t-S	3.5t-M	3-3.5t
2-stage standard Mast	M200	2000	3000	3000	3500	3500	1570	1620	155	160	4804	4994	5004	5194	6/6
	M250	2500	3000	3000	3500	3500	1820	1870	155	160	4852	5042	5057	5247	6/8
	M300	3000	3000	3000	3500	3500	2070	2120	155	160	4900	5090	5110	5300	6/10
	M330	3300	3000	3000	3500	3500	2220	2270	155	160	4929	5119	5142	5332	6/10
	M350	3500	3000	3000	3500	3500	2320	2370	155	160	4948	5138	5163	5353	6/10
	M370	3700	3000	3000	3500	3300	2420	2470	155	160	4967	5157	5184	5374	6/6
	M400	4000	3000	2850	3500	3150	2620	2670	155	160	5047	5237	5268	5458	6/6
	M425	4250	2850 *2900	2750 *2800	3300 *3400	3050 *3150	2745	2795	155	160	5071	5261	5294	5484	6/6 *6/10
	M450	4500	2750 *2850	2600 *2700	3150 *3350	2800 *3000	2870	2920	155	160	5095	5285	5321	5511	6/6 *6/10
	M500	5000	2400 *2800	2200 *2350	2850 *2900	2450 *2500	3120	3170	155	160	5143	5333	5374	5564	6/6 *6/6
	M550	5500	2250 *2650	1950 *2150	2350 *2700	2300 *2350	3420	3470	155	160	5241	5431	5478	5668	3/6 *3/6
	M600	6000	1500 *2200	1300 *1900	1650 *2400	1450 *2100	3670	3720	155	160	5289	5479	5531	5721	3/6 *3/6
2-stage full free mast	ZM200	2000	3000	3000	3500	3500	1570	1620	340	443	4832	5022	5028	5218	6/6
	ZM250	2500	3000	3000	3500	3500	1820	1870	590	693	4882	5072	5081	5271	6/8
	ZM300	3000	3000	3000	3500	3500	2070	2120	840	943	4932	5122	5135	5325	6/10
	ZM330	3300	3000	3000	3500	3500	2220	2270	990	1093	4964	5154	5168	5358	6/10
	ZM350	3500	3000	3000	3500	3500	2320	2370	1090	1193	4984	5174	5189	5379	6/10
	ZM370	3700	3000	3000	3500	3200	2420	2470	1190	1293	5004	5194	5210	5400	6/6
	ZM400	4000	3000	2850	3500	3200	2620	2670	1390	1493	5082	5272	5290	5480	6/6
	ZM425	4250	2850 *2900	2650 *2700	3300 *3400	3050 *3150	2745	2795	1515	1618	5108	5298	5317	5507	6/6 *6/10
	ZM450	4500	2750 *2850	2500 2600	3150 *3350	2850 *3050	2870	2920	1640	1743	5136	5326	5346	5536	6/6 *6/10
	ZM500	5000	2400 *2800	2100 *2600	2850 *2900	2350 *2750	3120	3170	1890	1993	5190	5380	5402	5592	6/6 *6/6
	ZM550	5500	2250 *2650	1950 *2400	2350 *2700	2200 *2550	3420	3470	2190	2293	5289	5479	5505	5695	3/6 *3/6
	ZM600	6000	1500 *2200	1300 *2000	1650 *2400	1350 *2200	3670	3720	2440	2543	5342	5532	5561	5751	3/6 *3/6
3 stage full free mast	ZSM360	3600	3000	2850	3500	3250	1870	1870	640	640	5043	5233	5221	5411	6/6
	ZSM400	4000	3000	2750	3500	3100	2020	2020	790	790	5084	5274	5262	5452	6/6
	ZSM435	4350	2850 *2900	2550 *2600	3200 *3350	2950 *3100	2120	2120	890	890	5113	5303	5291	5481	6/6 *6/6
	ZSM450	4500	2700 *2850	2450 *2600	3050 *3200	2850 *3000	2170	2170	940	940	5128	5318	5306	5496	6/6 *6/6
	ZSM470	4700	2650 *2800	2400 *2550	2900 *2950	2650 *2700	2230	2230	1000	1000	5146	5336	5324	5514	6/6 *6/6
	ZSM480	4800	2600 *2750	2350 *2550	2900 *2950	2550 *2600	2270	2270	1040	1040	5156	5346	5334	5524	6/6 *6/6
	ZSM500	5000	2450 *2750	2100 *2550	2800 *2900	2350 *2450	2370	2370	1140	1140	5183	5373	5361	5551	6/6 *6/6
	ZSM540	5400	2250 *2650	1950 *2350	2350 *2700	2200 *2400	2470	2470	1240	1240	5213	5403	5391	5581	3/6 *3/6
	ZSM600	6000	1400 *2200	1250 *2200	1650 *2400	1300 *2400	2670	2670	1440	1440	5317	5507	5403	5593	3/6 *3/6
	ZSM650	6500	1250 *2000	950 *1900	1300 *2200	1000 *2200	2870	2870	1640	1640	5372	5562	5550	5740	3/3 *3/3
	ZSM700	7000	*1800	*1800	*2000	*2000	3045	3045	1815	1815	5422	5612	5600	5790	3/3 *3/3

Note: *Indicates the rated load capacity of the front wheel with twin tyres; When the front wheels of 3-3.5t are twin tyres (pneumatic tyres) and twin tyres (solid tyres), the service weight is increased by 140kg and 208kg respectively according to the table data.
2-stage full free mast: 3t: When there is no backrest, the free lifting height increases by 477mm; 3.5t: When there is no backrest, the free lifting height increases by 407mm.
3-stage full free mast: 3t: When there is no backrest, the free lifting height increases by 427mm; 3.5t: When there is no backrest, the free lifting height increases by 407mm.

Optional item

	Model	Lead acid type-S	Lead acid type-M	Lithium type-S	Lithium type-M
Basic items	Pneumatic tire*	●	●	●	●
	Solid tire	○	○	○	○
	Single tire (front wheel)	●	●	●	●
	Dual tire (front wheel)**	○	○	○	○
	Two piece valve	●	●	●	●
	Three or four piece valve	○	○	○	○
	Normal type mast with a lift height of 3m	●	●	●	●
	Other types and other height series mast***	○	○	○	○
	Standard series forks	●	●	●	●
	Non standard series forks and attachments	○	○	○	○
	Standard body color (blue gray+Heli red)	●	●	●	●
	Other body colors (customized by customers)	○	○	○	○
Safety items	Steering speed limit	○	○	○	○
	Reverse handle with horn switch	○	●	○	●
	Overspeed alarm 5km/h	○	○	○	○
	Overspeed alarm 8km/h	○	○	○	○
	Overspeed alarm 10km/h	○	○	○	○
	Travelling+lifting+tilting+attachment equipped with OPS function (without lowering)	●	●	●	●
	Full set of OPS functions	○	○	○	○
	Seat belt switch	○	○	○	○
	Multiway valve overload	●	●	●	●
	Dry powder fire extinguisher (0.5kg)	○	○	○	○
	Dry powder fire extinguisher (2kg)	○	○	○	○
	Carbon dioxide fire extinguisher (2kg)	○	○	○	○
	Reverse buzzer	●	●	●	●
	Reverse Chinese-speaking horn	○	○	○	○
	With a non-universal key	●	●	●	●
	With universal key	○	○	○	○
	Electronic lifting upper buffer	○	○	○	○
	Central wide-angle rearview mirror	●	●	●	●
	Two side rearview mirrors+central wide-angle rearview mirror	○	○	○	○
	Reverse radar (4 probes)	○	○	○	○
	Reverse camera (1 camera+4 radar probes)	○	○	○	○
Comfort items	Semi enclosed seat	●	●	●	●
	Fully suspended seats	○	○	○	○
	Instrument panel with 1 USB interface (5V/1A)	○	●	○	●
	Steering wheel activation steering	○	○	○	○
	Synchronous steering	○	○	○	○
	Steering wheel with handle ball	●	●	●	●
	Steering wheel without handle ball	○	○	○	○
	Fan	○	○	○	○
Overhead guard	Increase the height of the overhead guard by 50mm	○	○	○	○
	Reduce the height of the overhead guard by 50mm	○	○	○	○
	Overhead guard with protective net	●	●	●	●
	Overhead guard with water deflector	●	●	●	●
Lights	LED rear work light (1)	○	○	○	○
	Rear LED red/blue spotlight (1)	○	○	○	○
	Left and right rear three red/blue light strip lights	○	○	○	○
	Fixed LED flashing warning light	○	●	○	●
	Fixed LED rotary warning light	○	○	○	○
	Fixed LED rotating buzzer warning light	○	○	○	○
Others	Metric thread	●	●	●	●
	Tilt cylinder sleeve	○	○	○	○
	Steering cylinder sleeve	○	○	○	○
	REMA power connector	●	●	●	●
	National standard charging gun	-	-	○	○
	Domestic batteries	●	●	●	●
	GS battery	○	○	-	-
	HOPPECKE battery	○	○	-	-
	FAAM battery	○	○	-	-
	With automatic water replenishment	○	○	-	-
	HELI FICS system	○	○	○	○

Note:
(1)"●"Standard ;"○"Optional ;
(2)Some non-standard options need to be customized. Please consult local sales personnel or product development technicians before purchasing.
(3)3-3.5t rear wheel is equipped with solid tyre as standard.